PREVIEW

NEW PRODUCTS 2013/2014

A.LEDA B-EYE
A.LEDA CC / TW / W
SHARPY WASH 330

ENGLISH

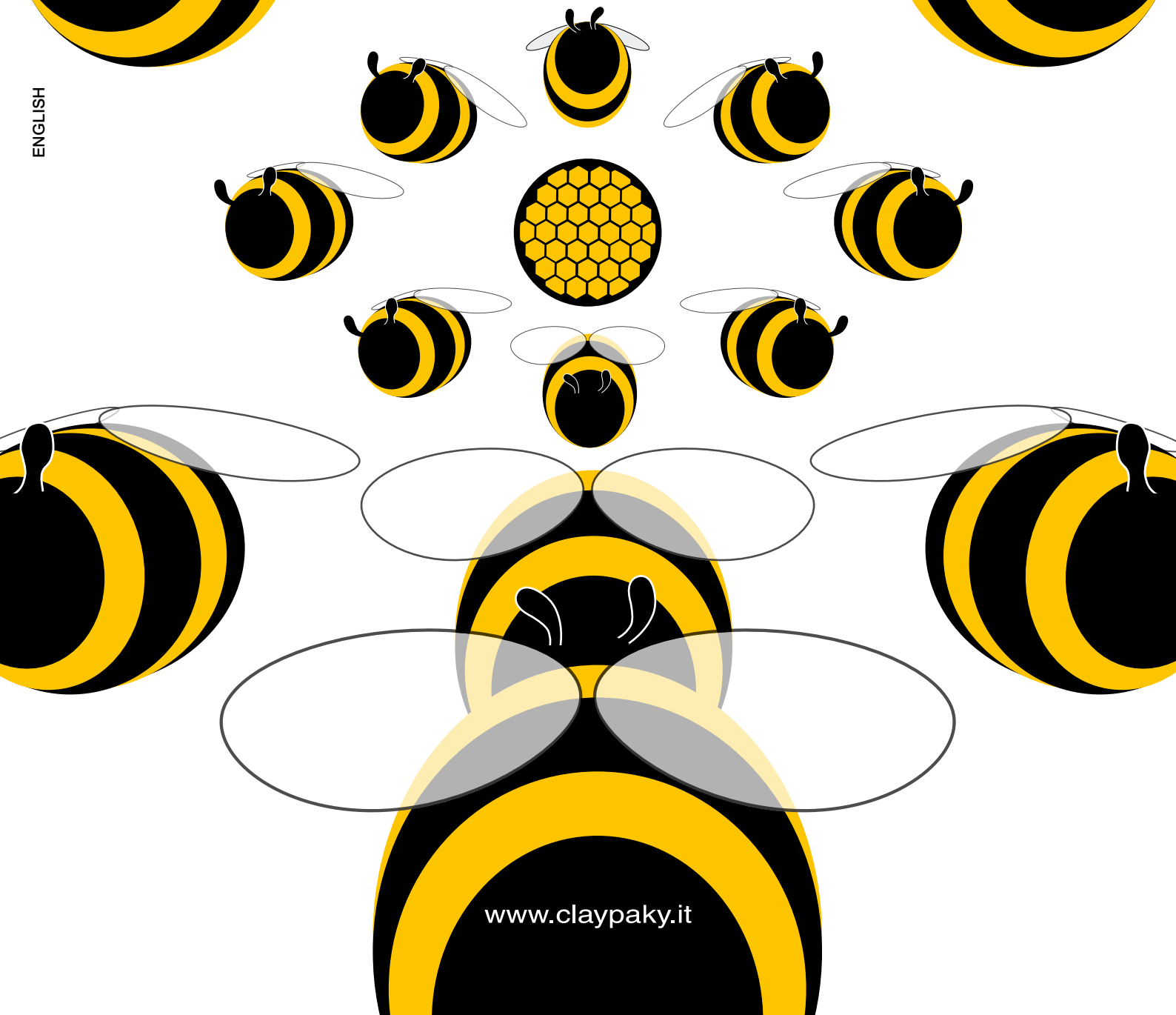

www.claypaky.it

A.LEDA B-EYE

Versatile and spectacular

Greatest Clay Paky novelty of this year is **A.LEDA B-EYE**, a product that you will appreciate for its truly innovative concept and for its amazing features. The keywords describing A.LEDA B-EYE are: versatile and spectacular.

A.LEDA B-EYE is versatile because it can be used in many diverse ways, even within the same project. In fact this fixture is, simultaneously, a state-of-the-art LED wash-light, an amazing "beam-light" and a projector for totally unseen, stunning graphic effects.

First and foremost A.LEDA B-EYE is a perfect wash-light, generating beautiful colours and featuring an impressive, wide 6° to 70° beam aperture. The zoom however can be closed even further, down to as little as 4 degrees thus switching the light from a wash diffusion into a narrow and parallel beam. In this operating mode B-EYE becomes a "beam-light", whose beam consists of an array of nearly indiscernible, individually controllable little beams. As in the B-EYE LEDs can be controlled one by one, the light beam is a pulsating bundle where every micro-beam has its own colour and shade.

B-EYE finally introduces a totally unseen feature that turns it into a stunning effect light: the front lens can be rotated in either directions and at variable speed and many little beams are created, that can be unfolded or closed like petals. When colours and dynamic patterns are added, B-EYE generates countless kaleidoscopic projections, as no other LED fixture has ever done.

MAIN FEATURES

- Versatile, three operating modes: wash, beam, graphic
- Unique optical system, featuring unmatched zoom range (4°-70°) and even light spread
- Individual LED control and invisible front grid
- Enhanced colour and colour temperature control, with arc lamp emulation
- Exclusive parallel beam consisting of an array of individually controllable micro-beams
- Enhanced electronic engine for dynamic beam pattern design, with digital accuracy and repeatability
- Rotating front lens (K20 only) for countless kaleidoscopic effects, for aerial or projection use

October 2013
Subject to change without notification

"Our treasure lies in the beehive of our knowledge"
(Friederich Nietzsche)

A.LEDA B-EYE in ACTION

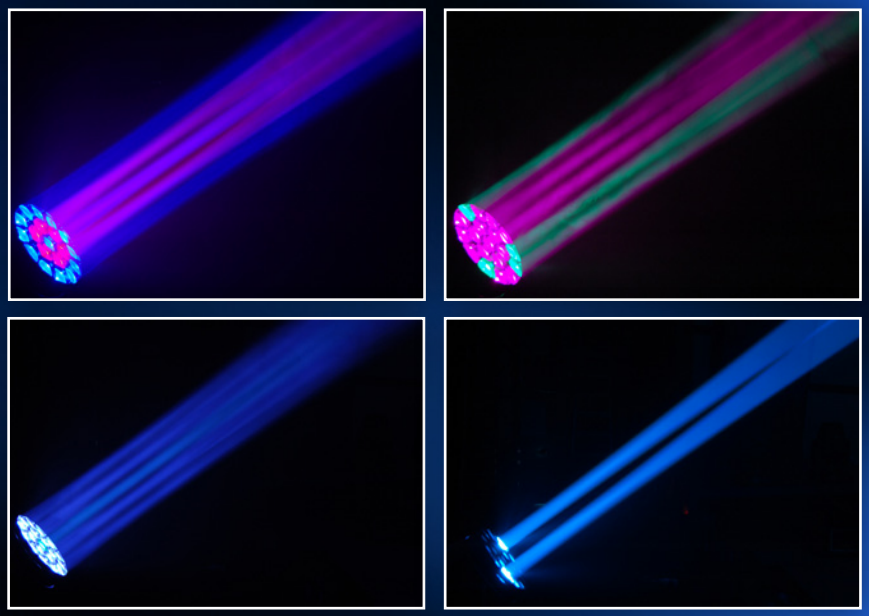

Impressive parallel beams, with countless digitally controlled 3D shape / colour patterns

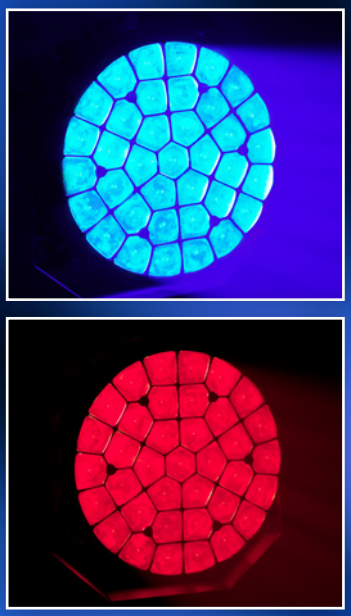

Nearly invisible front frame

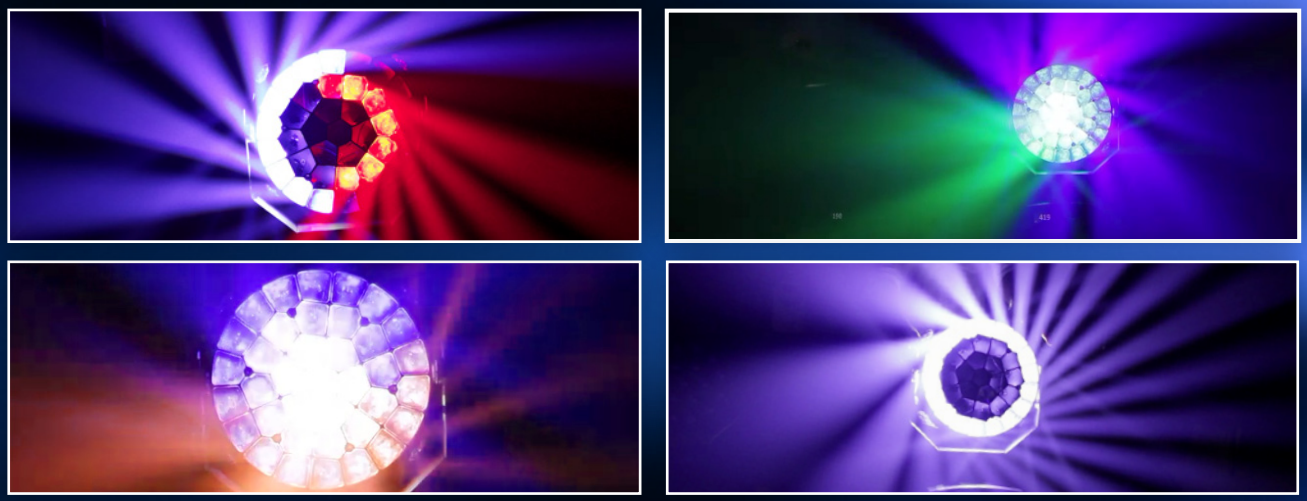

Limitless kaleidoscopic projections, programmable and repeatable with digital accuracy

Unrivalled 4° to 70° zoom range and totally even colour distribution on the front lens

WEIGHT AND DIMENSIONS (mm/inches)

21 kg (46.3 lbs)

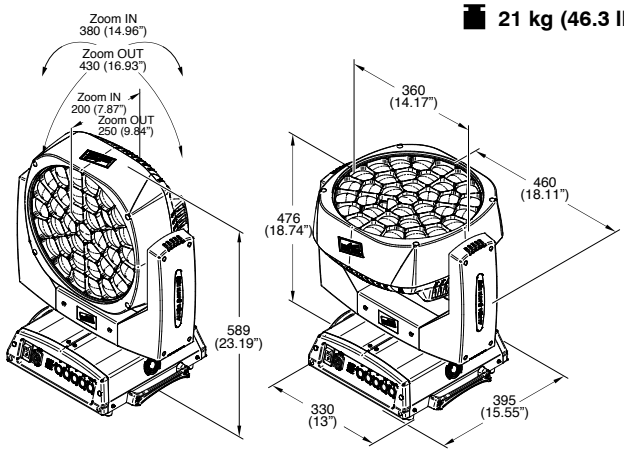

14.5 kg (31.9 lbs)

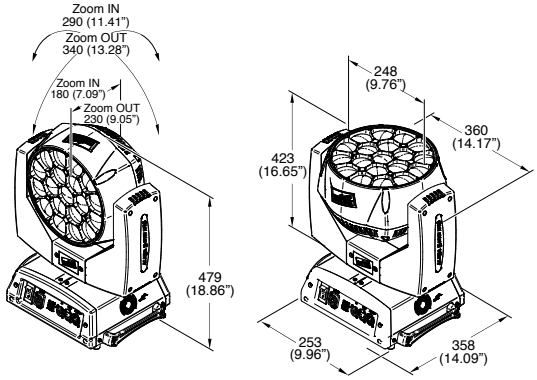

	K20					K10					K5
	A.LEDA B-EYE	**A.LEDA WASH**	**A.LEDA "CC"** (Colour Changer)	**A.LEDA "TW"** (Tuneable White)	**A.LEDA "W"** (White)	**A.LEDA B-EYE**	**A.LEDA WASH**	**A.LEDA "CC"** (Colour Changer)	**A.LEDA "TW"** (Tuneable White)	**A.LEDA "W"** (White)	**A.LEDA WASH**
Code	**C61420**	**C61410**	**C61413**	**C61411**	**C61412**	**C61415**	**C61405**	**C61408**	**C61406**	**C61407**	**C61401**
Source Type	RGBW	RGBW	RGBW	White 2600 and 7500 K	White 7500 K	RGBW	RGBW	RGBW	White 2600 and 7500 K	White 7500 K	RGBW
LED Nominal Wattage	15W	15W	15W	15W	15W	15W	15W	15W	15W	15W	15W
Number of LEDs	37	37	37	37	37	19	19	19	19	19	7
Enhanced Light Output	•					•					
Individual LED Control	•	•				•	•				•
Washlight Mode	•	•	•	•	•	•	•	•	•	•	•
Beamlight Mode	•					•					
Kaleido Effect	•										
Zoom Range (@ 10% peak)	11°- 70°	16°- 68°	16°- 68°	16°- 68°	16°- 68°	11°- 70°	16°- 68°	16°- 68°	16°- 68°	16°- 68°	13° (fixed)
Zoom Range (@ 50% peak)	6°- 45°	9°- 43°	9°- 43°	9°- 43°	9°- 43°	6°- 45°	9°- 43°	9°- 43°	9°- 43°	9°- 43°	7° (fixed)
Beam Aperture(@ 10% peak) in Beam mode	4°					4°					
Unnoticeable Sources and Front Frame	•					•					
Front Lens bi-directional Rotation	•										
Digital Wash-Beam Framing Effect	•										
Beam Edge Softnening Control (in Wash mode)	•										
Pixel Patterning Macros with Enhanced Control	•	•				•	•				•
White CT Emulation 2500 - 8000 K	•	•	•	•		•	•	•	•		•
RGB auto-tuning to Lamp CT Emulation	•	•	•			•	•	•			•
Tungsten Lamp Emulation	•	•	•	•		•	•	•	•		•
High CRI (>94)				•					•		

B-EYE

VERSATILE *AND MULTITALENTED LIKE ALL BEES IN THEIR HIVE*

TIRELESS *LIKE A WORKER-BEE*

THOUGHTFUL *LIKE A HONEYBEE'S WAGGLE DANCE*

GROUNDBREAKER *LIKE A FORAGER BEE SEARCHING FOR NEW NECTAR RESOURCES*

SHARP *LIKE A BEE STING*

A.LEDA B-EYE: *BREATHTAKING EFFECTS AND CUTTING EDGE VERSATILITY*

A.LEDA CC / TW / W

New additions to the A.LEDA LED-washlight family

For those applications where a simpler, yet powerful washlight is required, Clay Paky developed a new fixture named **A.LEDA CC (Colour Changer)**, featuring R-G-B-White colour mixing.

When colour changing is not required, the new Clay Paky **A.LEDA TW (Tuneable White)** can be used, providing tuneable colour temperature through additive mixing, ranging from 2600 to 7500 K.

Finally, for the simplest applications, Clay Paky has created **A.LEDA W (White)**, a moving head LED flood-light generating a fixed 7500 K white light.

MAIN FEATURES

- **A.LEDA CC**: Clay Paky quality for an excellent washlight with enhanced colour and colour temperature control
- **A.LEDA TW**: high quality white light, with smoothly tuneable colour temperature; tungsten lamp emulation
- **A.LEDA W**: punchy moving head floodlight, with even light diffusion

October 2013
Subject to change without notification

SHARPY WASH 330

The little wash-light that makes a big difference

code C61378

The Sharpy Wash 330 is an extraordinarily compact lightweight washlight with a 330 W lamp, but with the light output and optical and graphical performance typical of a 1000 W spot light. It is fast and silent, and equipped with CMY color mixing, special colors, a mechanical dimmer, a rotating beam shaper and a motorized top hat.

The optical system is highly versatile with a zoom that ranges from 6.5° (a "narrow" angle that makes it quite similar to a beam moving light, like the Sharpy) to a striking 48°, which is perfect for theatrical and television environments.

The Sharpy Wash 330 is an eco-friendly light. It is ideal for lighting designers, who can increase the number of lights in a project without increasing their investment. It is every rental company's dream since it allows them to offer small washlights with high luminous efficiency and low operating costs in terms of power consumption, transport and warehouse storage.

The top hat is a valuable feature especially in professional use, where any parasite emission must be eliminated.

Sharpy Wash 330 has a motorized top hat following the zoom excursion (Clay Paky patented).

MAIN FEATURES

- New 330W Lamp (8,000 K 1,500 h)
- Equalling the light output of a 1,000 Watt luminaire
- Small, lightweight and easily transported: only 18.5 Kg (40.8 lbs)
- Adjustable beam angle from 6.5° to 48°
- Motorised top hat (Clay Paky patented)
- CMY Color System and 11-color wheel + open
- Rotating beam shaper
- High speed movements and effects
- Frosted, smooth mechanical dimmer
- High speed stop/strobo effect
- Soft-edge filter + heavy frost filter
- New, high-performance electronics
- Patented Italian design
- Eco-friendly: replaces far larger and more expensive washlights
- Electronic ballast fitted as standard
- Available in black, white, gold-plated and "mirror-finish" chrome plated versions

COLOR WHEEL

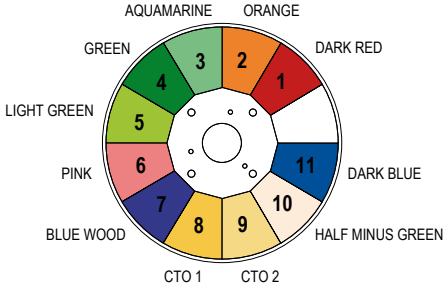

WEIGHT AND DIMENSIONS (mm/inches)

18.5 kg (40.8 lbs)

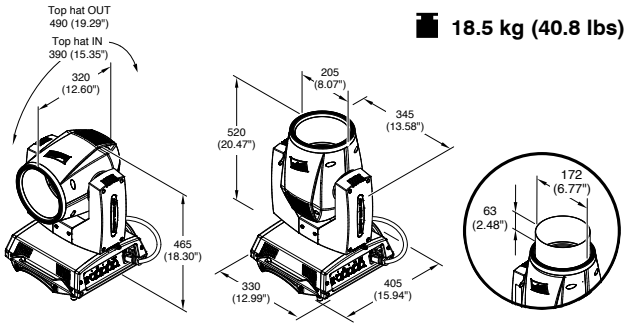

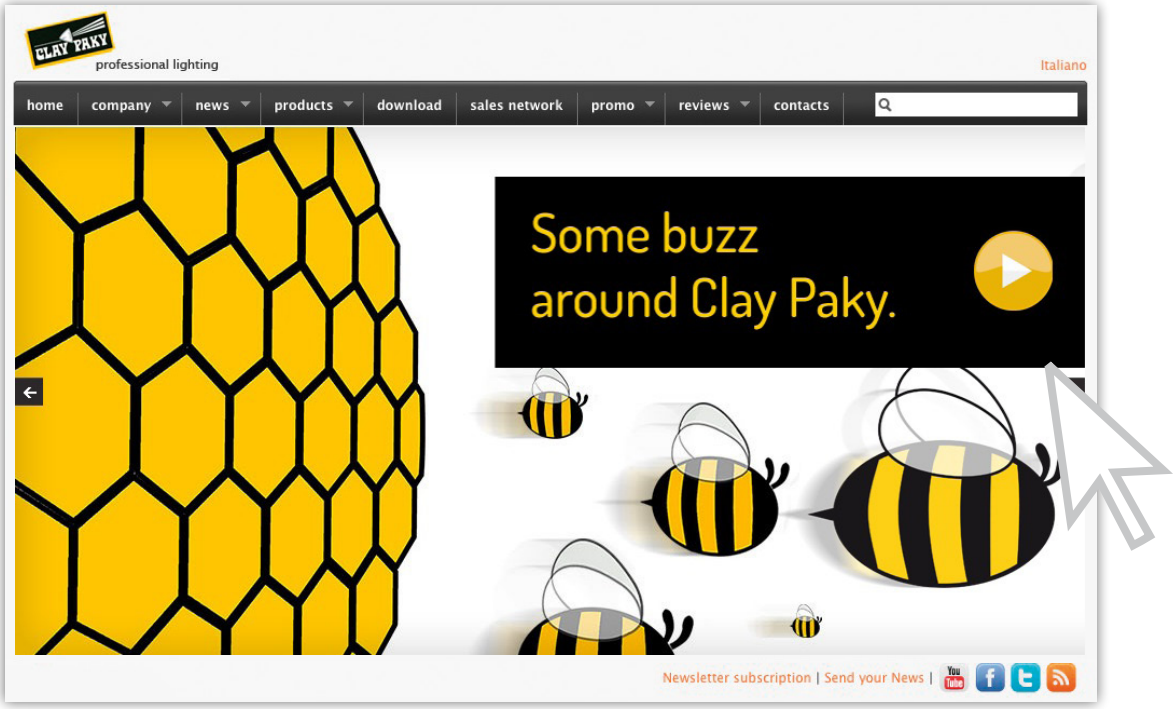

www.claypaky.it

Would you like to purchase or rent Clay Paky products?
Do you need spare parts or the support of an expert technician?
Consult our Global Network list at www.claypaky.it and
get in touch with our nearest contact in your country.

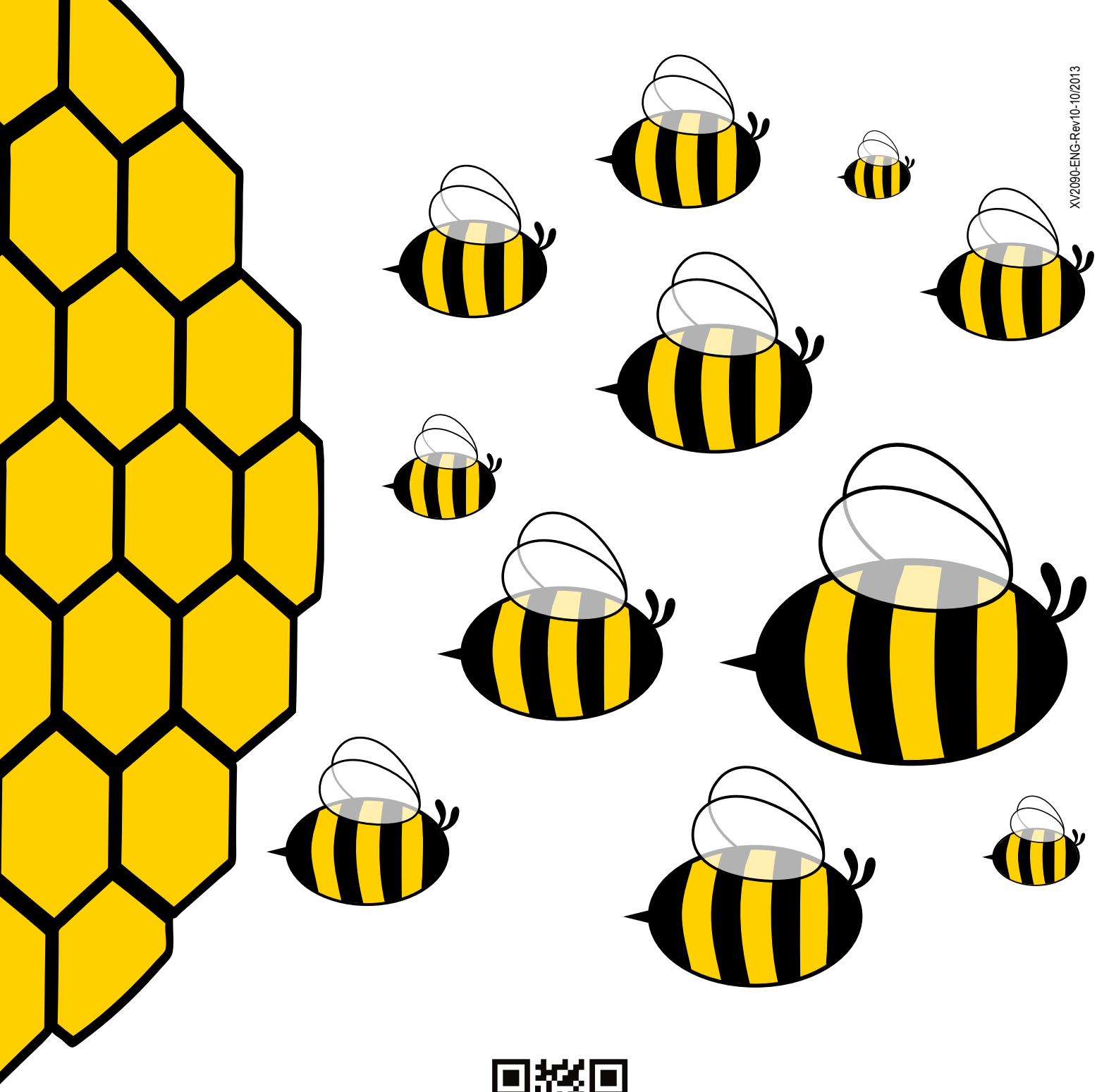

XV2090-ENG-Rev10-10/2013

CLAY PAKY S.p.A. - I - 24068 Seriate (BG) - Via Pastrengo, 3/b - Phone +39 035 654311 - Fax +39 035 301876
cp.sales@claypaky.it - www.claypaky.it